## 2.1 Introduction

A machine element used for holding or joining two or more parts of a machine or structure is known as a fastener. The process of joining the parts is called fastening. The fasteners are of two types : permanent and removable (temporary). Riveting and welding processes are used for fastening permanently. Screwed fasteners such as bolts, studs and nuts in combination, machine screws, set screws, etc., and keys, cotters, couplings, etc., are used for fastening components that require frequent assembly and dissembly. Screwed fasteners occupy the most prominent place among the removable fasteners.

In general, screwed fasteners are used :

- To hold parts together.
- To adjust parts with reference to each other and
- To transmit power.

## 2.2 Screw Thread Terminology

A screw thread is obtained by cutting a continuous helical groove on a cylindrical surface (external thread). The threaded portion engages with a corresponding threaded hole (internal thread): forming a screwed fastener. Following are the terms that are associated with screw threads (Fig. 2.1).

### 1. Major (nominal) diameter

Major diameter is the largest diameter of a screw thread, touching the crests on a external thread or the roots of an internal thread.

### 2. Minor (core) diameter

Minor diameter is the smallest diameter of a screw thread, touching the roots or core an external thread (root or core diameter) or the crests of an internal thread.

### 3. Pitch diameter

Pitch diameter is the diameter of an imaginary cylinder, passing through the threads at points where the thread width is equal to the space between the threads.

### . Pitch

Pitch is the distance measured parallel to the axis, between corresponding points on djacent screw threads.

Scanned by CamScanner

## 2.3 Thread Designation

The diameter-pitch combination of an ISO metric screw thread is designated by the letter 'M' followed by the value of the nominal diameter and pitch, the two values being separated by the sign '×'. For example, a diameter pitch combination of nominal diameter 10 mm and pitch 1.25 mm is designated as M10 × 1.25.

If there is no indication of pitch in the designation, it shall mean the coarse pitch. For example, M 10 means that the nominal diameter of the thread is 10 mm and pitch is 1.5 mm.

Following are the other designations, depending on the shape of the thread profile :

SQ 20 × 5 – SQUARE thread of nominal diameter 20 mm and pitch 5 mm

ACME 20 × 4 – ACME thread of nominal diameter 20 mm and pitch 4 mm

WORM 20 × 3 – WORM thread of nominal diameter 20 mm and pitch 3 mm

## 2.4 Conventional Representation of External and Internal Threads

The true projection of a threaded portion of a part consists of a series of helices and it takes considerable time to draw them. Hence it is the usual practice to follow some conventional methods to represent screw threads. Figure 2.1 shows the true projection of a screw thread, whereas the conventional representation of external and internal threads as recommended by BIS (Bureau of Indian Standards) is shown in Fig. 2.2.

It may be noted from Fig. 2.2, that the crests of threads are indicated by a continuous thick line and the roots, by a continuous thin line. For hidden screw threads, the crests and roots are indicated by dotted lines. For threaded parts in section, hatching should be extended to the line defining the crest of the thread. In the view from side, the threaded roots are represented by a portion of a circle, drawn with a continuous thin line, of length approximately three-quarters of the circumference.

The limit of useful length of screw threads is represented by a continuous thick line or a dotted line, depending on its visibility. The length upto which the incomplete threads are formed beyond the useful limit, is known as a run-out. It is represented by two inclined lines.

## 2.5 Front and Side View of a Hexagonal Headed Bolt Across Flats

Drawing hexagonal bolt head or nut, to the exact dimensions is labourious and time consuming. Moreover, as standard bolts and nuts are used, it is not necessary to draw them accurately. The following approximate methods are used to save the draughting time :

Empirical relations :

Major or nominal diameter of bolt = d

Thickness of nut = 0.9d

Width of nut across flat surfaces, W = 1.5d + 3 mm

Radius of chamfer, R = 1.5d

Scanned by CamScanner

**5. Lead**

Lead is the distance a screw advances axially in one turn.

**6. Flank**

Flank is the straight portion of the surface, on either side of the screw thread.

**7. Crest**

Crest is the peak edge of a screw thread, that connects the adjacent flanks at the t

**8. Root**

Root is the bottom edge of the thread that connects the adjacent flanks at the botto

**9. Thread angle**

Thread angle is the angle included between the flanks of the thread, measured in an axial plane.

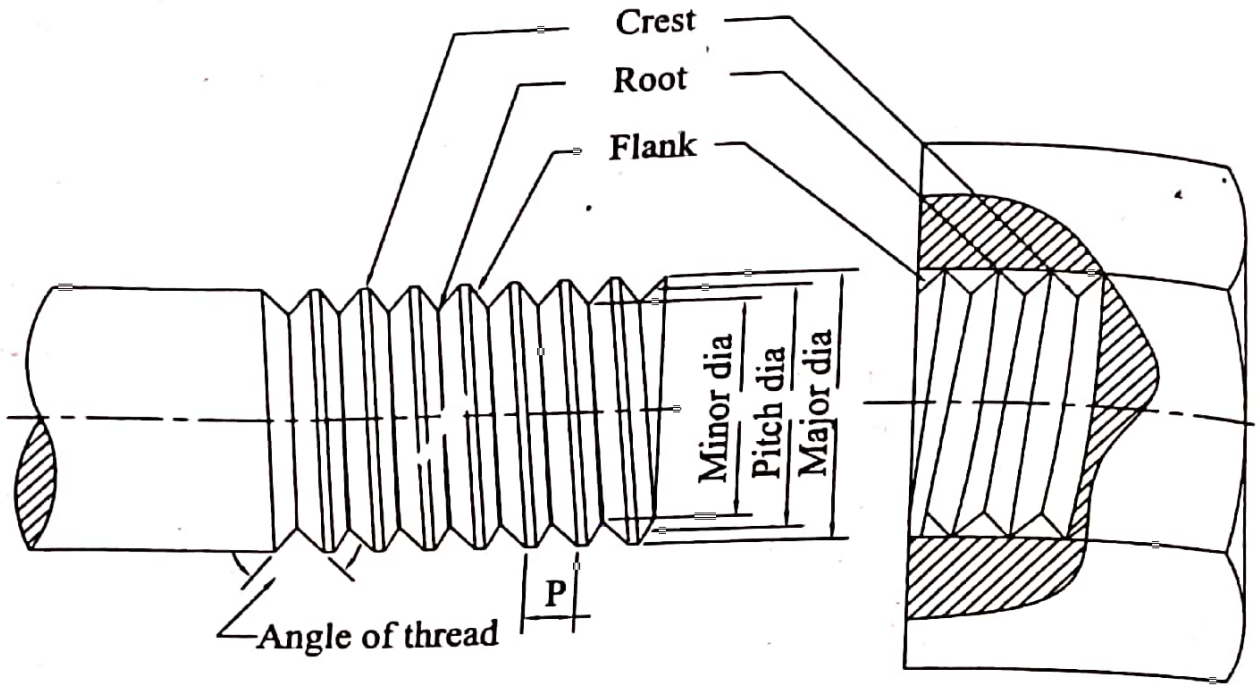


Fig.2.1 Screw thread terminology

**10. Lead**

Lead is the axial distance advanced by a nut for its one full turn over a threaded roo a single start thread, the lead and pitch or identical. On a double start thread, the lead is twic pitch and on a triple start thread, the lead is three times the pitch. Thus, the lead may al defined as the product of the pitch and number of starts.

**11. Depth of thread**

Depth of thread is the distance between the crest and root of a thread which is mea normal to the axis on an axial plane.

Scanned by CamScanner

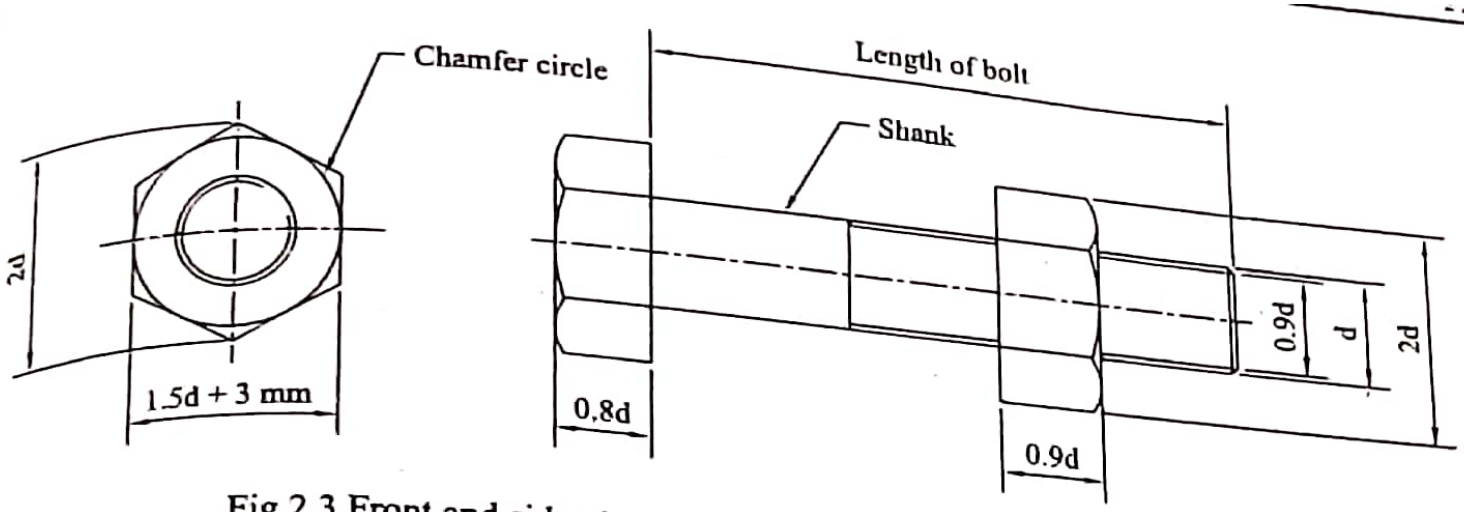


Fig.2.3 Front and side view of a hexagonal headed bolt across flats

Ans : For a nominal diameter of 20 mm. The standard proprtions are:

Thickness of bolt head = 16 mm

Thickness of nut head = 18 mm

Width across flats = 33 mm

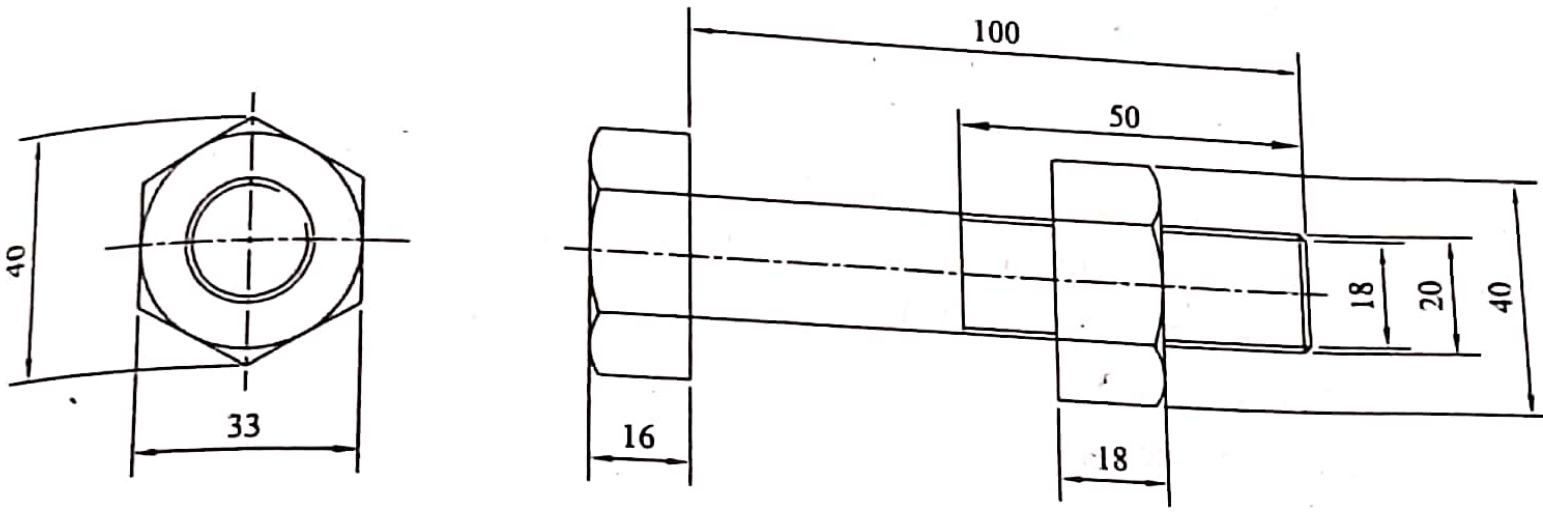


All dimensions are im mm

Fig.2.4

## 2.6 Front and Side View of a Hexagonal Headed Bolt Across Corners

The standard proportions for hexagonal headed bolt across corners is same as th hexagonal headed bolt across flats.

Major or nominal diameter of bolt =d

Thickness of nut = 0.9d

Width of nut across flat surfaces, W = 1.5d + 3 mm

Radius of chamfer, R = 1.5d

Scanned by CamScanner

Thickness of bolt head = 0.8d

Length of bolt = As specified

Thread length = 2d + 6mm (for l < 150 mm)

= 2d + 12mm ( for l > 150 mm)

The Fig.2.5 shows the front and side view of a hexagonal headed bolt across corners having nominal diameter "d" with standard proportions.

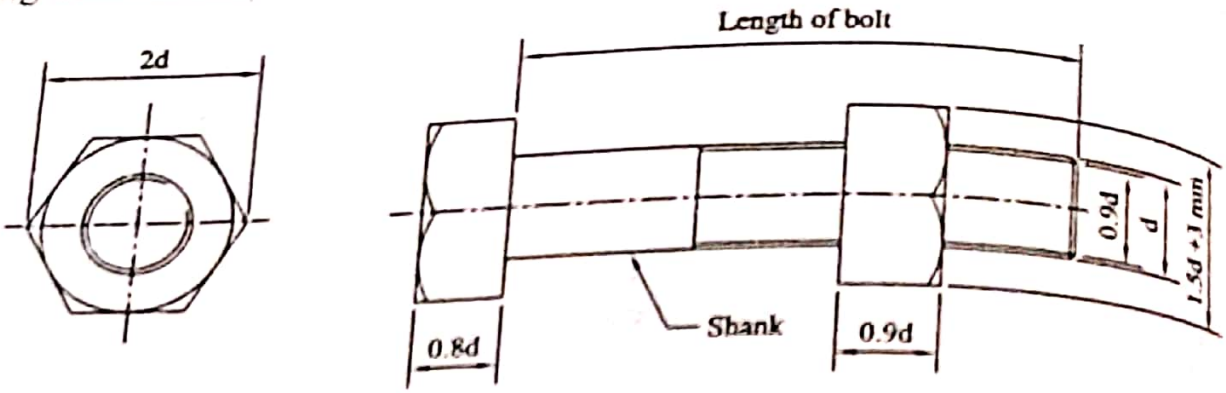


Fig.2.5 Front and side view of a hexagonal headed bolt across corners

**Example 2.2 :** Draw the front and side view of ISO threaded hexagonal bolt and nut of 120 mm long with a threaded length of 60mm looking across corners. Nominal diameter of bolt is 24 mm.

**Ans :** For a nominal diameter of 24 mm. The standard proprtions are:

Thickness of bolt head = 19 mm

Thickness of nut head = 22 mm

Width across corners = 48 mm

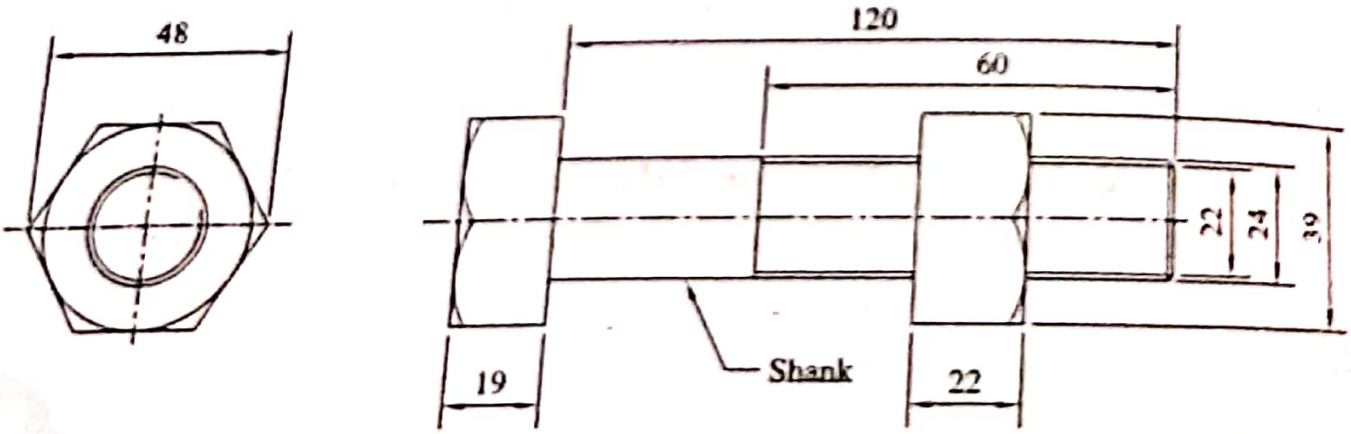


All dimensions are in mm

Fig.2.6

Scanned by CamScanner

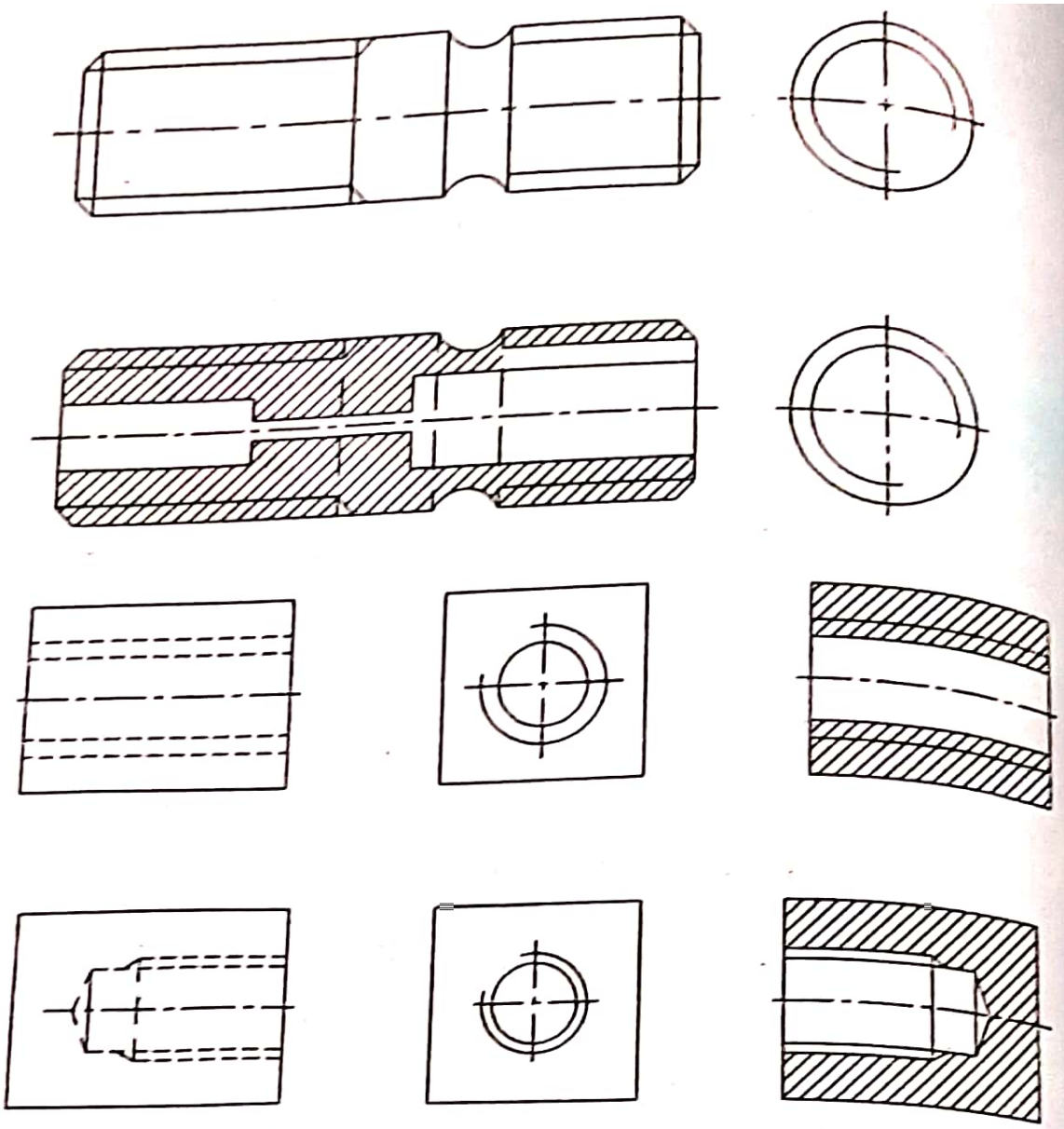

Fig.2.2 Conventional representation of threads

*Thickness of bolt head = 0.8d*

*Length of bolt = As specified*

*Thread length = 2d + 6mm (for l < 150 mm)*

*= 2d + 12mm ( for l > 150 mm)*

*The Fig.2.3 shows the front and side view of a hexagonal headed bolt across flats he nominal diameter d with standard proportions.*

***Example 2.1 :*** *Draw the front and side view of ISO threaded hexagonal bolt and nut of 100 long with a threaded length of 50 mm looking across flats. Nominal diameter of bolt is 20 m*

Scanned by CamScanner