UNIT – 1 PART – B

FOUNDATION

- Each type of building has two main components. The structure constructed above ground level is called **super structure**, And
  the structure constructed below the ground level is called **substructure.**

- **FOUNDATION**
- Foundation is that part of a building or any other structure, which supports the super structure which is directly over it. The strength and durability of any structure depends on the strength of the foundation.

- Foundations are generally built with brick, stone, concrete, RCC etc. The selection of the material for the foundation and the type of foundation depends upon the type of the structure.

- The foundation is designed in such away, that soil should not fail and the settlement is within the safe limit.

Types of foundation

Foundations are broadly classified into 2 types

1. Deep foundation
2. Shallow foundation

Shallow foundation:

A foundation is said to be shallow when the **depth** of the foundation is **equal or less than its width**. The object of this foundation is *to distribute the structural load over a larger area* at shallow depth. A footing is a foundation constructed with brick masonry, stone masonry or concrete under the base of the wall or column. To distribute load over the larger area.

Object \ Purpose of foundation

Foundation is provided for the following purpose.

1. To distribute the load of the structure on larger area, so that the intensity of load does not exceed safe bearing capacity of soil.
2. To distribute the load on the soil evenly to prevent unequal settlement of a foundation.
3. To support the structure.
4. To provide a leveled and hard surface, for the super structure construction.
5. To increase the overall stability of the structure by preventing from tilting or overturning against wind, earthquake condition.
6. To prevent lateral movement.
7. To safeguard the structure against undermining due to animals or scouring by flood water.
8. To minimize the cracks due to movement of moisture in weak soils.

Essential Requirement of a good foundation

1. The constructed foundation should be capable of sustain the loads & to transmit to the sub-soil without affecting the stability of the building.
2. The foundation base should be rigid so that there is minimum differential settlement.
3. The foundation should be taken sufficiently deep

Types of foundation

Foundations are broadly classified into 2 types.

1. Deep foundation
2. Shallow foundation

- **Shallow foundation:** A foundation is said to be shallow when the depth of the foundation is equal or less than its width. The object of this foundation is to distribute the structural load over a larger area at shallow depth. A footing is a foundation constructed with brick masonry, stone masonry or concrete under the base of the wall or column. To distribute load over the larger area.

various types of shallow foundation.

1. Spread footing
2. Combined footing
3. Mat or raft foundations
4. Grillage foundations.
5. Eccentrically loaded footing.
6. Strap footing or cantilever footing.
7. Stepped footing

1. Spread footing

It is a very common type of foundation used for ordinary building. The **spread of the foundation** is known as **footing**. The spread is given to the foundation to distribute the load of the structure on a larger area.

- Following are the different types of spread footing

a) Wall footing
b) Column footing
c) Inverted arch footing

a.Wall Footing

- In this type of foundation brick or stones are used for foundation giving outward offsets on either side of the wall

  i) Wall footing using bricks

- The depth of each course is normally **100mm**. The offset is **5cm** on either side.

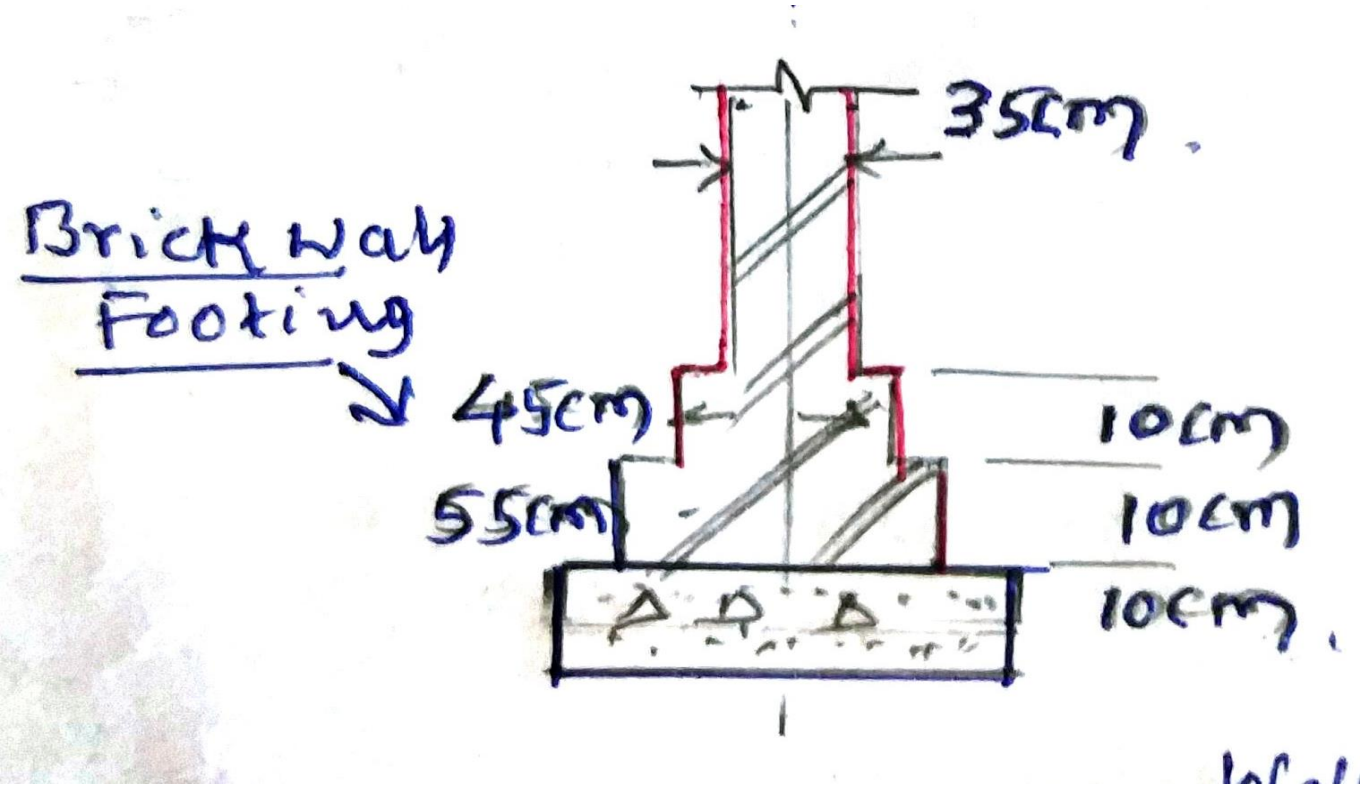

ii). Wall footing using stones

- In case of stone masonry, footing an offset of **7.5cm** is provided on either side of the wall. The height of each course is about **20cm** as shown in the figure.
- A bed of lean concert **1:4:8** or **1:5:10** is provided below the size stone masonry for the entire length of the wall. The thickness of the concrete is about **10 to 15cm**.

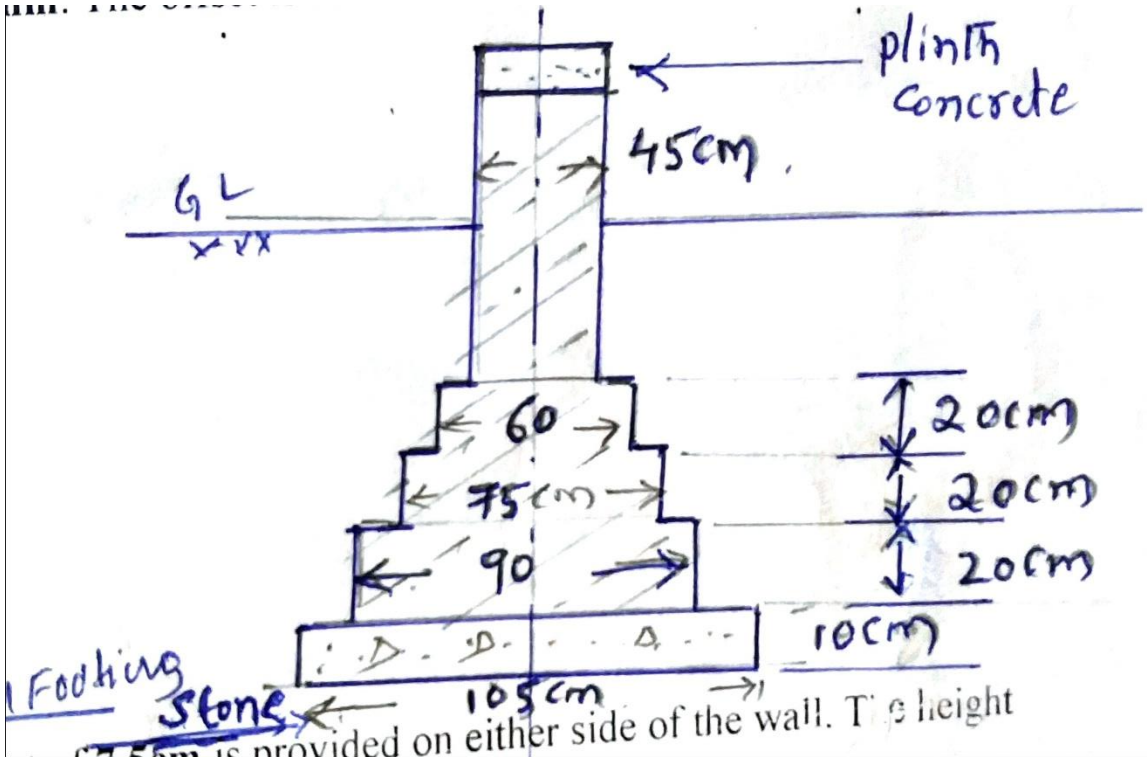

b)Column footing

They are used to support individual column. Steel reinforcement is provided in both direction of concrete bed. The shape of the footing may rectangular, circular, square in plan. Now a day's RCC concrete footing is generally used. Plane cement concrete **1:4:8 or 1:5:10 of 15cm** thick is provided below the footing. The figure shows RCC slopped footing.

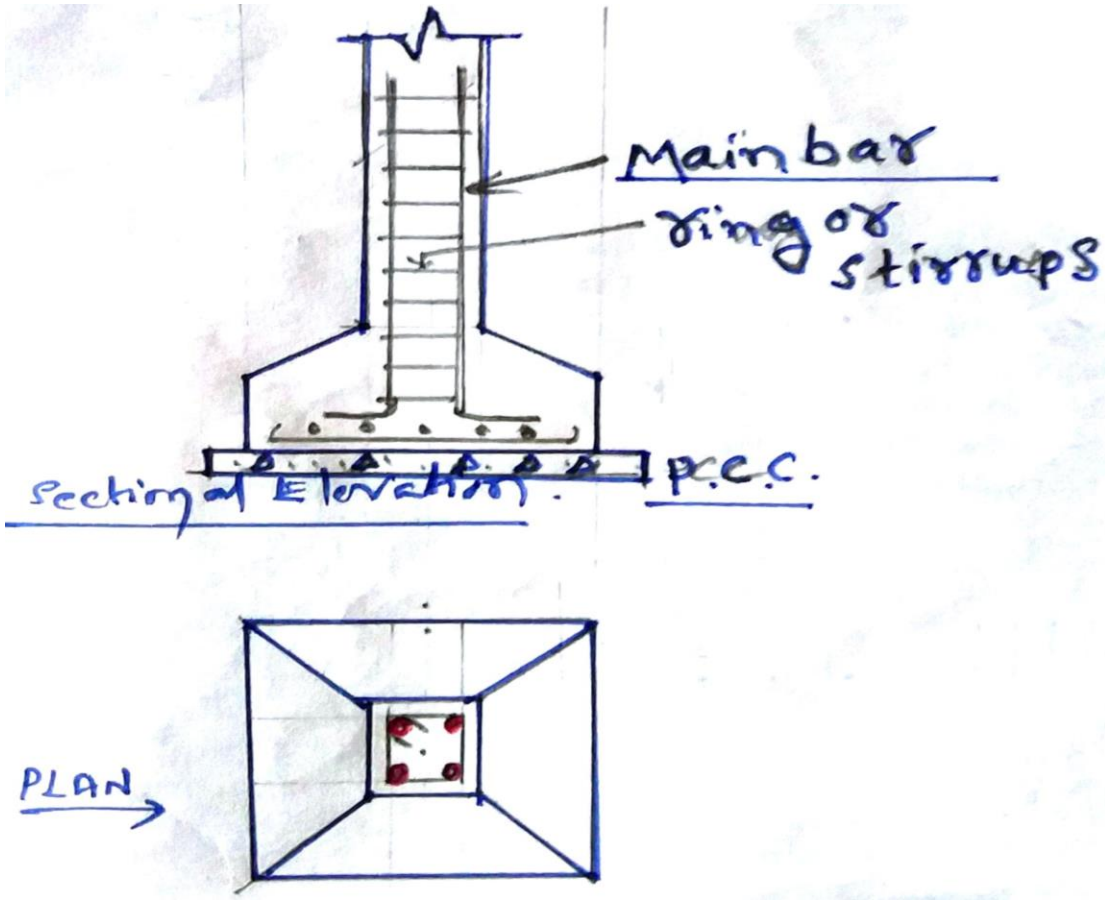

c) Inverted Arch footing:

- This type of foundation is normally not used in these days.
- It may be useful for structure like bridges reservoirs etc. the contact area of foundation is quite large. The intensity of pressure on the soil is reduced. This type of foundation considerably reduces the depth of excavation.

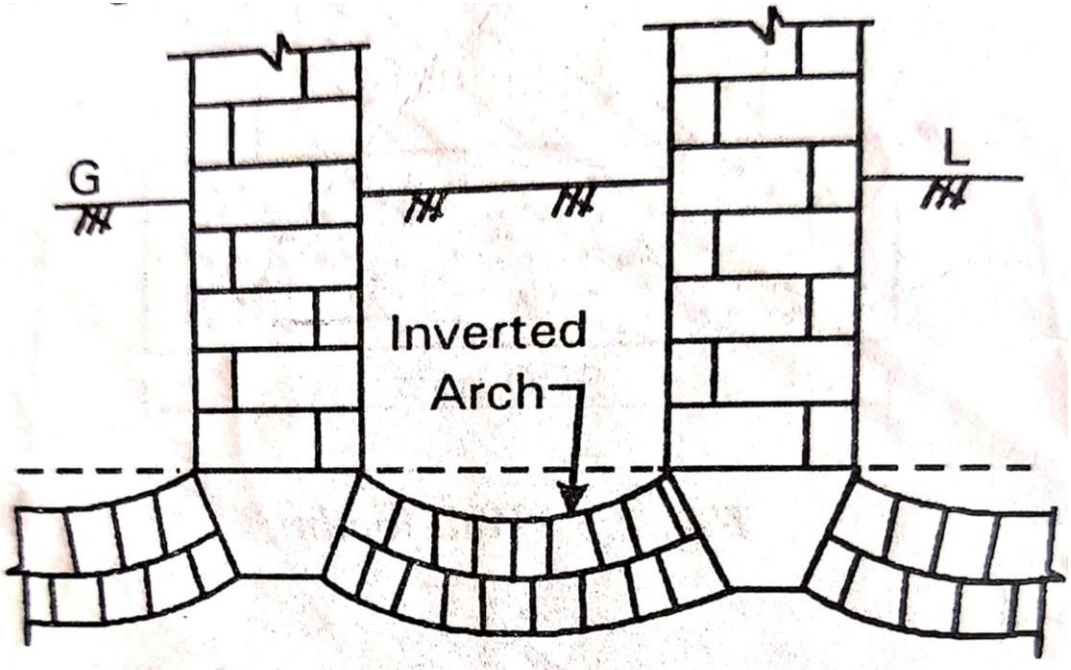

Fig. 2.5 : Inverted arch footing

d). Combined footing:

- A common footing provided to 2 or more columns is known as combined footing. It may be rectangular or trapezoidal in plan. This type of footing is provided under following situation or circumstances.
- Columns are very near to each other & their footings are overlapping
- When bearing capacity of soil is less & it is required to provide more area for footing.
- When the end column is to be located near the property line.
-
- The aim of providing combined footing is to get uniform pressure distribution.

Fig. Combined footing

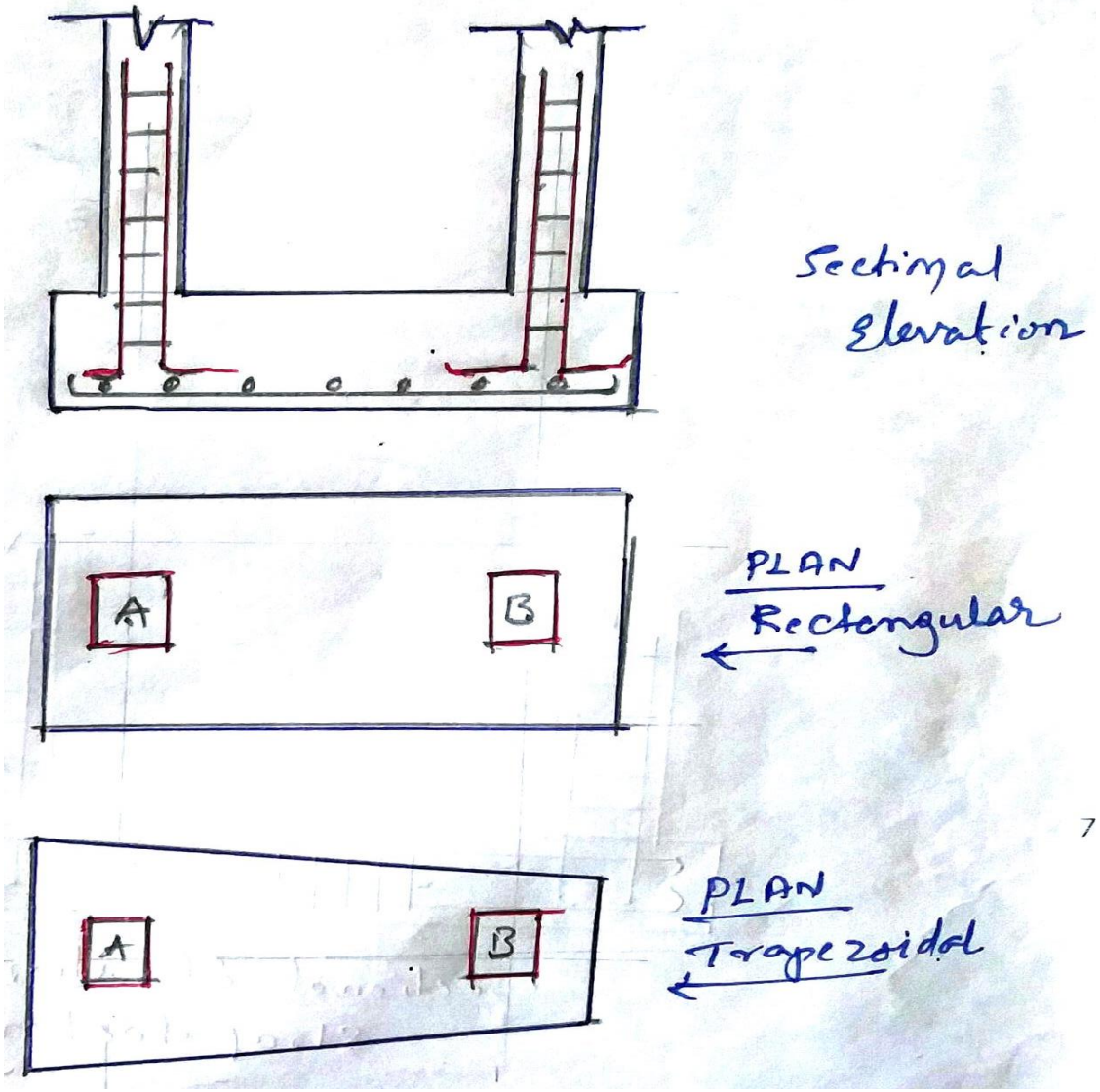

Mat foundation or Raft foundation

- **It is such a foundation that it covers the entire area under the structure. It consists of a slab and beam. This foundation is most suitable for heavy structures, to be constructed on soft soil or marshy site i.e., sites having low bearing capacity.**

- **Construction of raft foundation involves following steps.**

1. **Excavation in made to the required depth.**
2. **Necessary reinforcement is placed.**
3. **RCC slab for required thickness and proportion is placed.**
4. **After proper curing & the structure is built over it.**

- Advantages of MAT or RAFT type of foundation

❖ Overall settlement of structure is reduced.

❖ Distribution of load is uniform on entire area of foundation

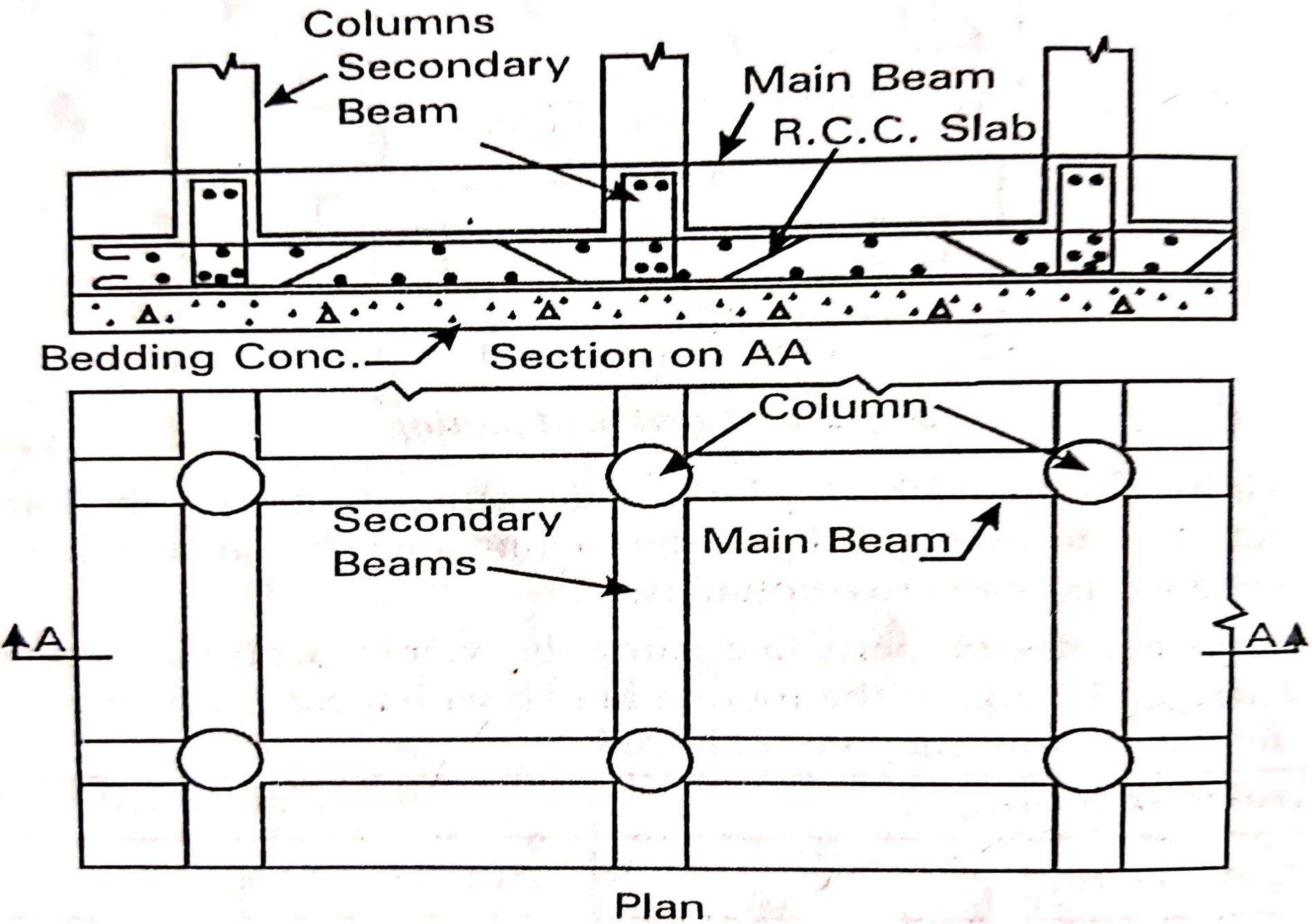

Fig. 2.7 : Raft foundation

Advantages of MAT or RAFT foundation

- Overall settlement of structure is reduced.
- Distribution of load is uniform on entire area of foundation

Strap footing or cantilever footing

- Strap footing consists of two or more individual footings they are connected by a beam called **strap**. This type of footing is provided when the foundation soil is soft.
- The load on the outer column located in the boundary line is balanced by the load on the inner columns through a cantilever beam.

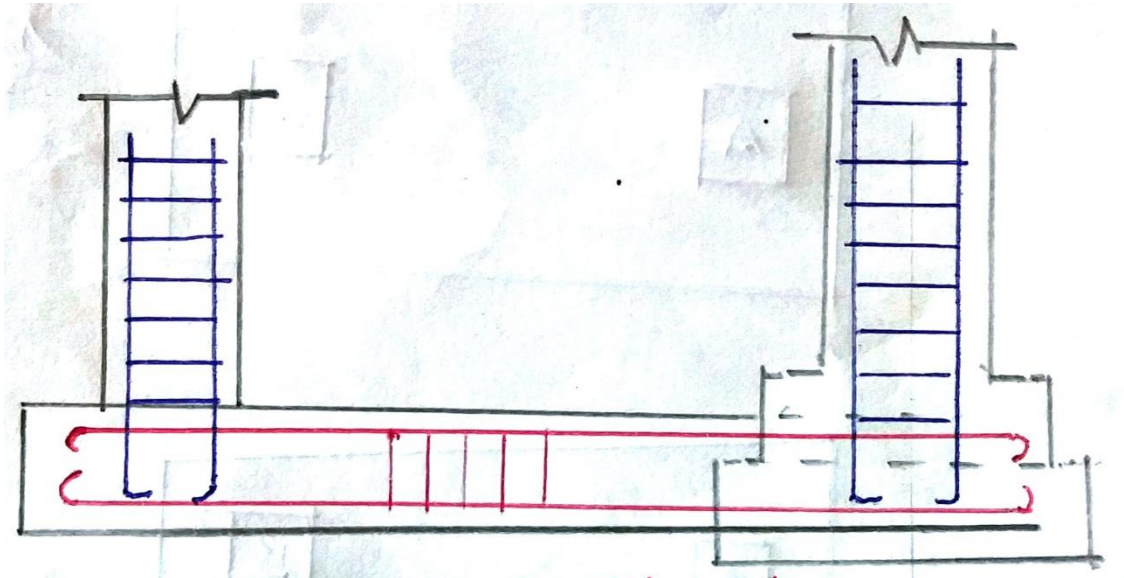

Sectional Elevation, Strap footing.

Deep foundation

- Deep foundations are those foundation in which, the depth of foundation is large; when compare to its width. When the bearing capacity of soil is poor & the space is restricted for footing of foundation then the deep foundations are provided. There are two types.

1. Pile foundation
2. Well or caisson foundation

Pile foundation

- These foundations are used for buildings, bridges etc.
- If a pile is constructed using concrete & steel or timber.
- It may be cast-in-situ or pre casted. The load of the structure is transferred to the hard strata through these piles or
- The load may be transferred due to the friction developed on the side of the pile.

Situations under which the pile foundation is recommended for structure.

1. Subsoil water table is high
2. Load coming on the structure is heavy
3. Raft foundation become very costly & impossible to adopt
4. It is not possible to timber the excavation trench
5. When the soil is compressible & water logged & hard bearing strata is located at larger depth
6. When the SBC of soil is very poor
7. When the structure is located nearby river bed or sea shore
8. Where there is danger of scouring action
9. The top soil is of expansive nature.

Types of pile foundation

Based on the functions or the use, piles may be classified as

1. Bearing pile
2. Friction pile
3. Steel pile
4. Anchor pile
5. Compaction pile
6. Screw pile
7. Fender pile
8. Batter pile

Bearing pile:

- Bearing pile are those piles which are driven into the ground until **hard strata is reached**. The end bearing piles are act as vertical columns. The soil around the pile also provides lateral support to the piles and it increases the bearing capacity of piles. This type of pile is used where subsoil is soft and the hard strata are not at a considerable depth.

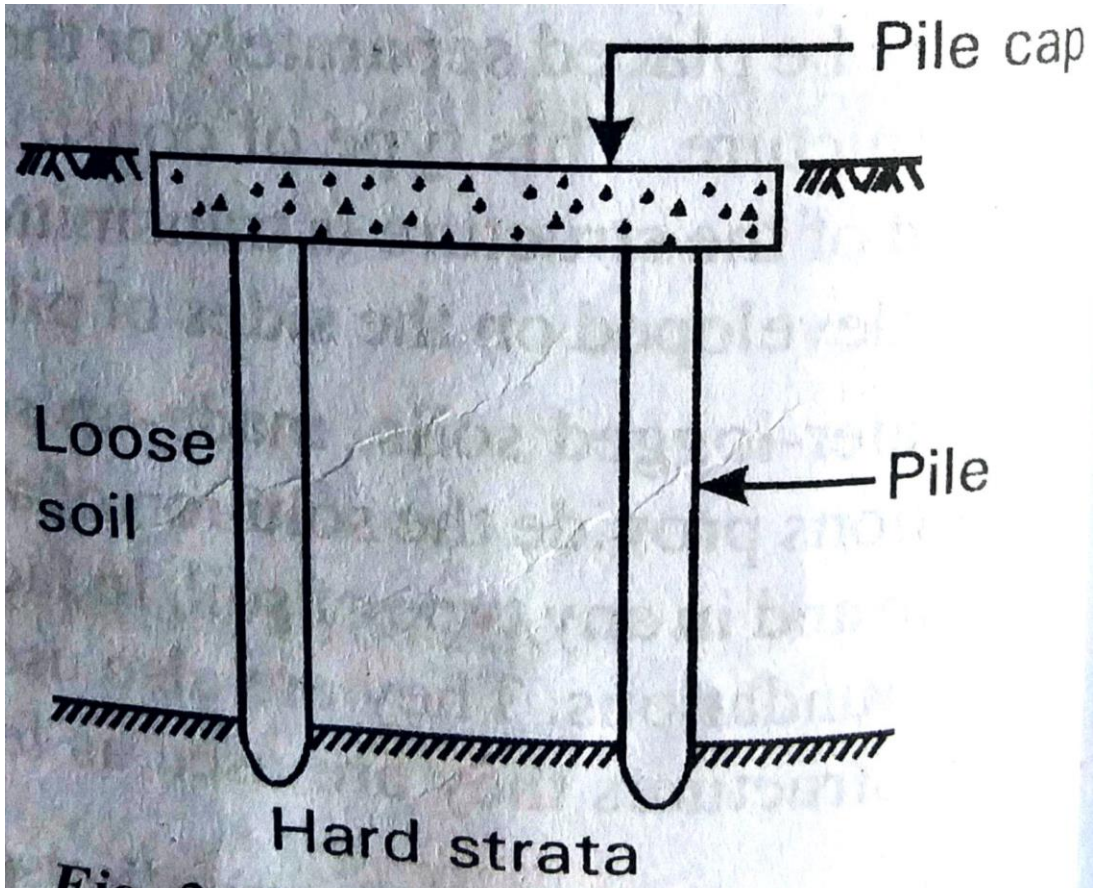

Fig. 2.12 : End bearing pile

Friction pile:

- These are the files which bear the load of the structure by its skin friction developed by the soil.
- These types of piles are used where there is a large depth of soft soil. It is not economical when you want to rest the bottom end of the pile on the hard stratum. The load is born by the piles through friction developed between the surface of the pile and surrounding soil.

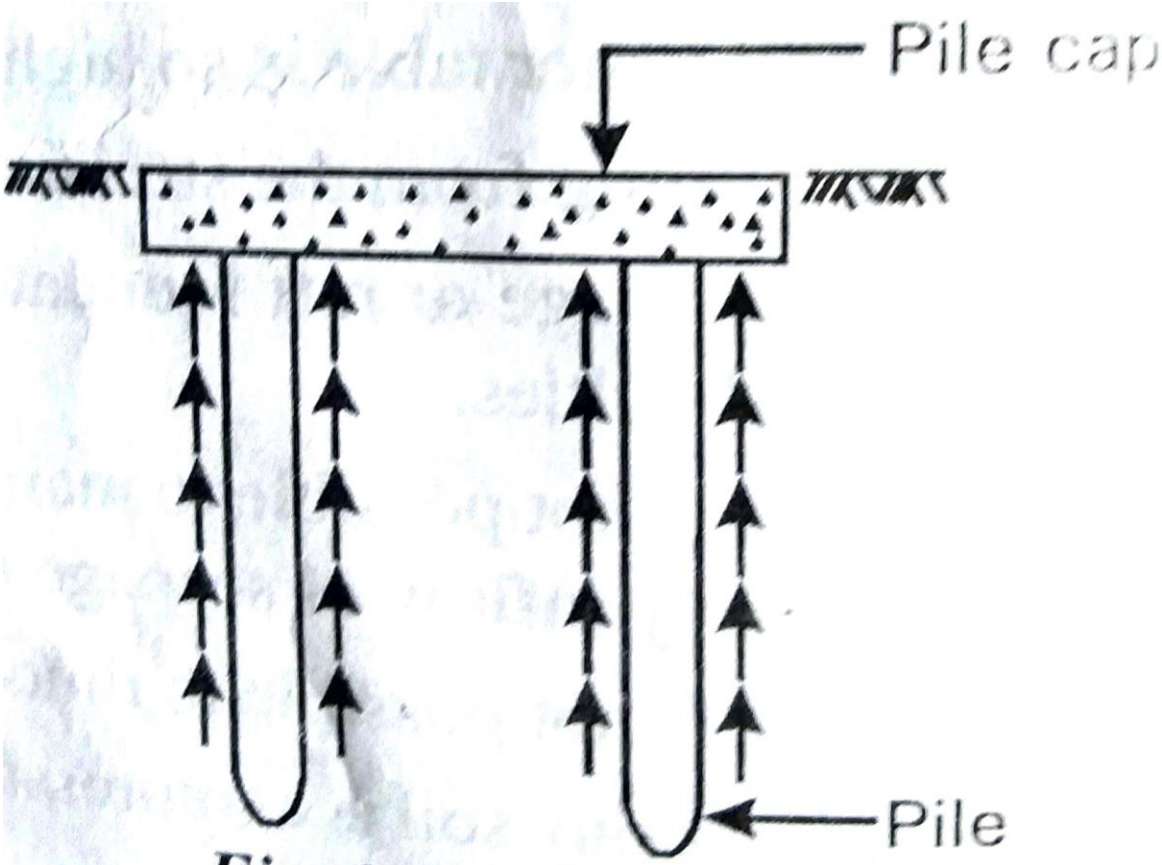

Fig. 2.13 : Friction Pile

CAUSES OF FAILURE OF FOUNDATION AND PREVENTIVE MEASURES.

Following are the causes of failure of foundation

1. Unequal settlement of subsoil.
2. Unequal settlement of masonry.
3. Horizontal movement in adjoining soil.
4. Withdrawal of moisture from the subsoil.
5. Lateral pressure on the super structure.
6. Action of atmospheric agencies.

1. Unequal settlement of subsoil

Following are the preventive measures

- Foundation should be made to rest on rigid strata such as rock or hard moorum
- SBC of subsoil should not be allowed to exceed.
- Avoid eccentric loading foundation should be constructed according to standard design & specification.

2.Unequal settlement of masonry:

- Use mortar of proper strength.
- Use thin mortar joints.
- The masonry work should be properly cured for at least **10 days**.

3. Horizontal movement in adjoining soil.

- The depth of foundation should be such that crack may not reach it.
- Raft of pile foundation are adopted instead of normal foundation.
- Prevent direct contact of foundation with bottom and adjoining soil by providing sand cushion

4.Withdrawal of moisture from sub soil

- Trees should be planted at a safe distance from the foundation. The foundation should be carried deeper.

5. Lateral pressure on the super structure

- Provide wide base to the foundation.

6. Action of atmospheric agencies

- Depth of foundation should be sufficiently deep and so that rain water may not reach it.
- Stone masonry should used in foundation because stones are less affected.

Foundation in black cotton soil

- Construction on black cotton soil is always a difficult problems to engineer's**. Black cotton** soil is dangerous for building construction because there is volumetric change of black cotton soil with the change of atmospheric conditions. "**It swells excessively when wet and shrinks excessively when dry**".

- Black cotton soil has a great affinity for water, since the soils contains fine clay particles, it swell when coming in contact with water. There is differential settlement of structure due to the movement of the ground. The differential settlement is due to alternative swelling & shrinkage of soil and it develops the cracks. The cracks formed are about **15cm to 20cm wide and 2.5m to 4m deep**.

PRECAUTION FOR THE SAFETY OF FOUNDATION IN BLACK COTTON SOIL

1. The SBC should be properly determined
2. The bearing capacity may be limited to **50 to 100KN/m^2** for the designing of foundation.
3. The depth of foundation should be taken to a depth, so that the cracks in the soil cannot reach the bottom of the foundation.
4. The measures should be taken so that water cannot reach the bottom of the foundation.
5. The foundation of the structure is prevented from direct contact with black cotton soil by replacing black cotton soil with sand or gravel.
6. If the depth of the black cotton soil is about **1 to 2m**. The soil should be completely removed.
7. Construction in black cotton soil should be under taken during dry season.
8. The bed of the foundation should be firm by ramming the bottom of the trench.

Methods of construction may be adopted for

black cotton soil foundation.

procedure is as follows.

- Excavate the foundation upto a depth, **d+300mm** d=depth of crack.
- Width of the trench is based on SBC **(not exceed 150KN/ m^2)**
- The trench is rammed well & a layer of gravel is spread in the trench and it is also rammed.
- A layer of concrete is laid to a depth **300mm to 500mm**
- Now the masonry work of the foundation is **started upto the plinth level.**
- The space left on either side of the foundation, **masonry is filled with or gravel.**

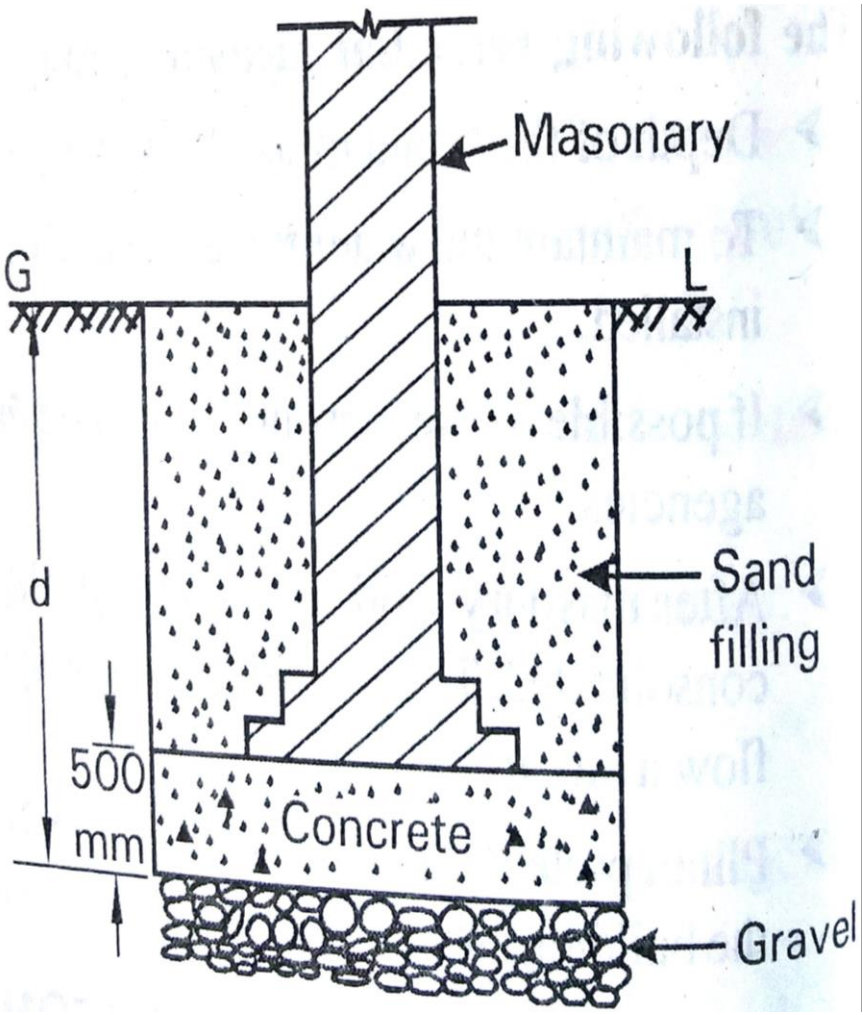

NECESSITY OF SHORING & STRUTTING

- If the soil is firm & depth of the foundation is not excessive, the side of the trench remains vertical without any support. If the foundations are deep and the soil is not firm, it must be supported by wooden planks & it is known as **timbering.**
- Following are the situation where shoring and strutting is necessary.

1. When the excavation is done near the property line.
2. If the excavation is done in sandy soil.
3. When the soil is of loose in nature, the trench cannot stand without support.

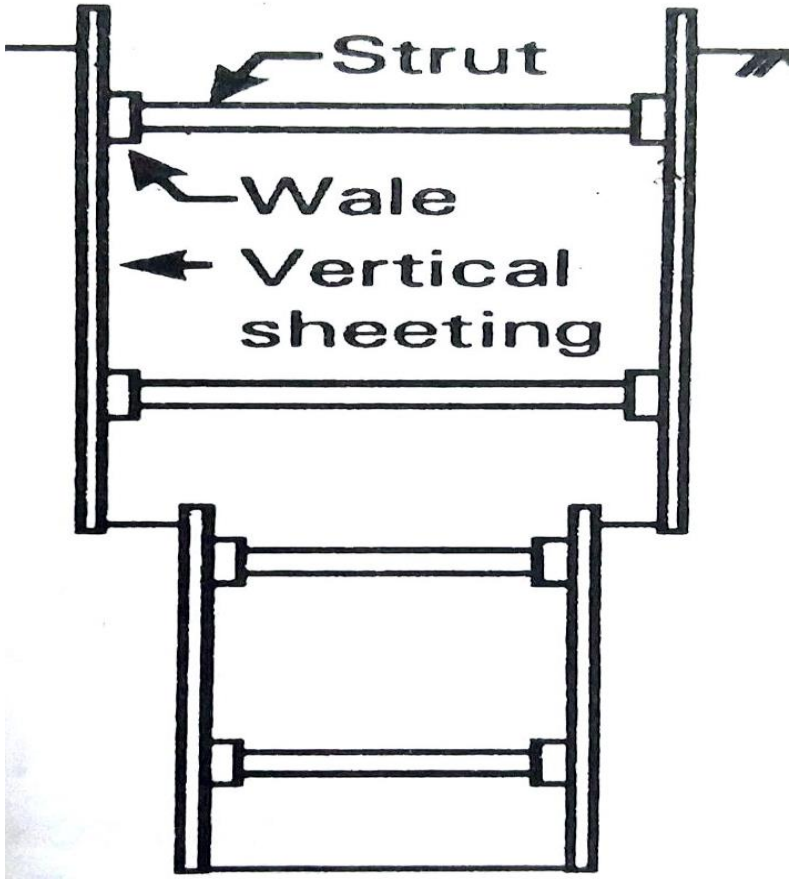

(a) By use of vertical sheeting

DEWATERING OF FOUNDATION TRENCHES

- When water table is very high or in the case of deep excavations the trenches for the structures are filled with seepage water. Removal of excess water from the **saturated soil is known as dewatering**. In the case of pervious soil there is continuous flow of seepage water.

- Following are the various methods of dewatering.

1. Pumping
2. Sumps and ditches
3. Well point
4. Deep well
5. Vacuum
6. Grouting
7. Freezing

1.**Pumping** :In this method pumps are installed along the foundation trenches at suitable points. The water entering into the trench is pumped out.

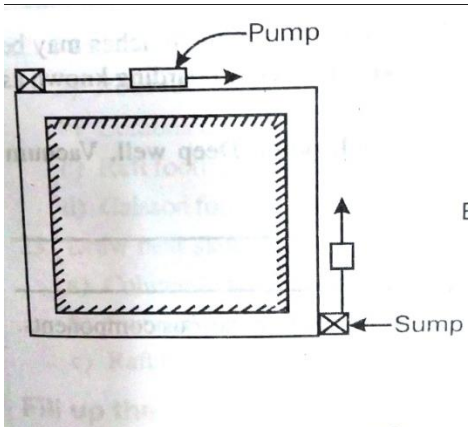

Fig. 2.22 : Plan of arrangement for pumping from sumps

2.. **Sumps and ditches**: In this method pumps are installed along the foundation trenches at suitable points. The water entering into the trench is pumped out.

3.Well point system:

- Well point is actually a perforated pipe 5 to 8cm dia with filter point. It is installed in the ground 1 to 2m spacing to a depth below the ground water depth.
- These wells are connected to horizontal pipe and it is connected to a pump.

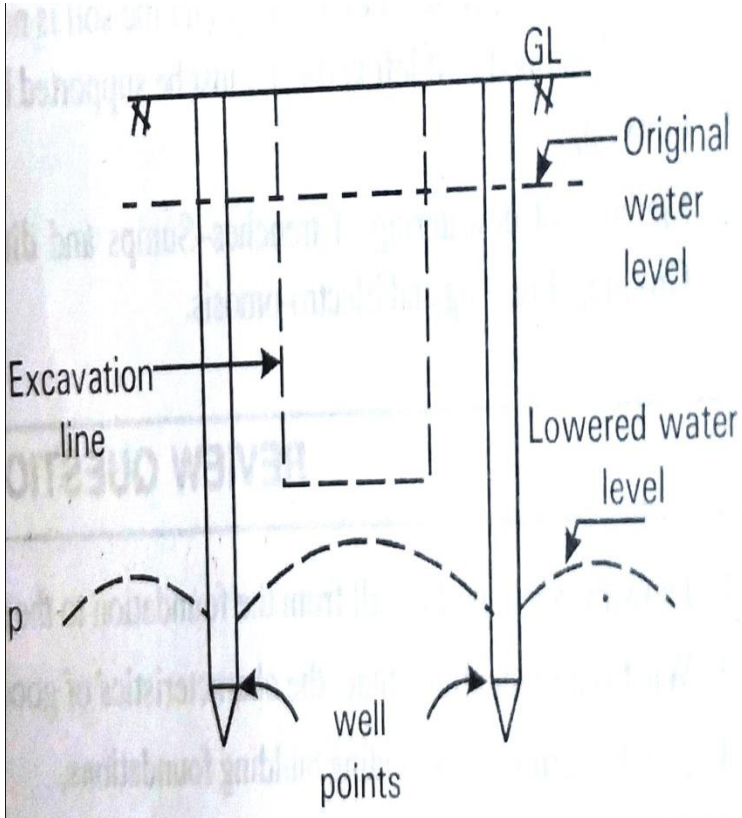

Fig. 2.23 : Well points around excavation